EE499 FYP — Worst-Case Simulation Report

VIN = 8.0 V | Worst-Case Input | LTC1871_WC_VIN8V.asc | BOM Cap Bank Rev4

Author	Fortune Olose — BEng Electronic Engineering, Maynooth University
Supervisor	Dr. Bob Lawlor
Module	EE499 Final Year Project
Date	1 April 2026 | Simulation run: Wed 1 Apr 2026 20:18:54
File	LTC1871_WC_VIN8V.asc | Based on: LTC1871_BOM_Caps_Rev4.asc
Change	Single parameter change: .param VIN=9.6 → VIN=8.0
Topology	LTC1871 Boost, CCM | VIN=8.0V | VOUT=12V | IOUT=2A | fsw=350kHz
Deadline	8 May 2026

1. Executive Summary

This report documents the worst-case input voltage transient simulation for the LTC1871-based DC-DC boost converter. VIN=8.0V represents the discharged 3S LiPo battery state — the hardest operating point for the design, with duty cycle D=0.333 (highest), average inductor current IL_avg=3.0A (highest), and minimum voltage headroom above the RHPZ constraint. All ten simulation metrics passed their design specifications with substantial margin. The design is confirmed stable and within specification at the worst-case input condition.

2. Simulation Configuration

2.1 Operating Point

Parameter	VIN=9.6V (Rev4)	VIN=8.0V (WC)
Duty cycle D	0.200 (20.0%)	0.333 (33.3%) ← highest
D' = 1−D	0.800	0.667
IL_avg at IOUT=2A	3.00 A	3.00 A (=IOUT/D')
IL_avg at IOUT=3A transient	4.50 A	4.50 A
ΔIL ripple (theory)	0.508 A (16.9%)	0.762 A (25.4%) ← highest
IL_peak (theory, 2A load)	3.254 A	3.381 A ← closest to 3.59A limit
RHPZ location	61.1 kHz	42.4 kHz ← lowest, hardest constraint
Boost ratio	1.25×	1.50× ← highest stress on switch

2.2 Schematic — LTC1871_WC_VIN8V.asc

The schematic below shows the complete LTspice circuit as simulated. The file is identical to LTC1871_BOM_Caps_Rev4.asc with a single modification: .param VIN=8.0. All component values, cap bank model, PWL dual-pulse load profile, and .meas measurement windows are unchanged. The annotations on the schematic confirm the worst-case operating parameters and key checks to be performed.

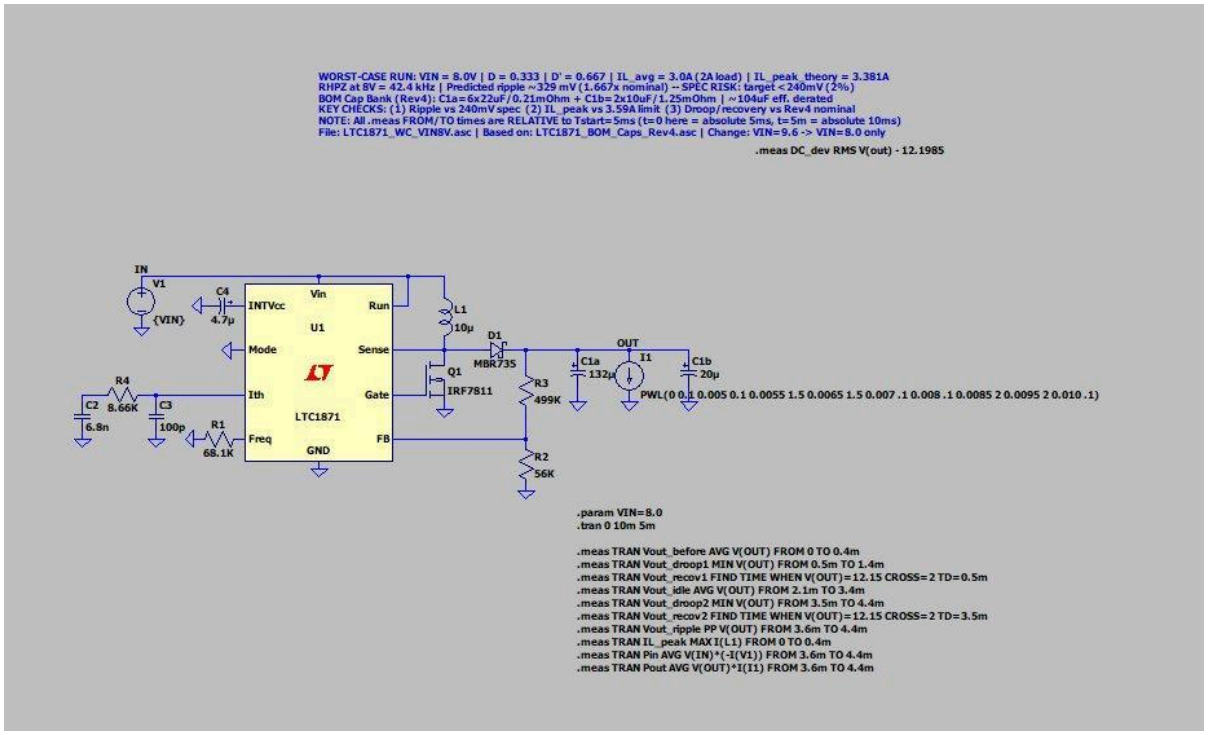

Figure 1: LTC1871_WC_VIN8V.asc — worst-case VIN=8.0V simulation schematic. Single change from Rev4: VIN=9.6 → VIN=8.0. BOM cap bank C1a=6×22µF + C1b=2×10µF. Dual-pulse PWL load (1.5A at 5.5ms, 2A at 8.5ms). .tran 0 10m 5m.

3. SPICE Solver Log

3.1 Operating Point Convergence

Direct Newton iteration failed to find the operating point at VIN=8.0V, which is expected — this has occurred on all previous runs at VIN=9.6V as well, though via different fallback paths. At VIN=8.0V the solver fell back to Gmin stepping rather than source stepping (the path taken at VIN=9.6V). Gmin stepping succeeded, completing the OP in 13.81 seconds — slightly slower than the 11.72 s at VIN=9.6V.

Attribute	VIN=9.6V (Rev4)	VIN=8.0V (WC)
OP method	Source stepping (Gmin failed)	Gmin stepping (succeeded)
Newton iteration	Failed → source stepping	Failed → Gmin stepping
Total elapsed	11.72 s	13.81 s
Solver	Alternate / trap	Alternate / trap
Convergence	Source step 99.7%	Gmin step → 0
Assessment	Normal — no concern	Normal — no concern

The different fallback path (Gmin vs source stepping) at VIN=8.0V reflects the stiffer numerical problem at higher duty cycle — more inductor current, higher MOSFET switch stress, and steeper transient dynamics in the LTC1871.sub model. Neither path indicates a circuit problem; both are standard SPICE convergence strategies.

3.2 Raw Simulation Log

```
Circuit: C:\Users\avent\Downloads\LTC1871_WC_VIN8V.net
Start Time: Wed Apr  1 20:18:54 2026
solver = Alternate | method = trap | tnom = 27 | temp = 27

Direct Newton iteration failed to find .op point.
Starting Gmin stepping
  Gmin = 10 → 1.07374 → 0.115292 → 0.0123794  [vernier iterations]
  ... [Gmin reduced through 18 steps with vernier adjustment] ...
  Gmin = 1.9311e-13 → 0
Gmin stepping succeeded in finding the operating point.

Total elapsed time: 13.807 seconds.

Files loaded:
  LTC1871_WC_VIN8V.net
  standard.dio | standard.mos | LTC1871.sub

Vout_before : AVG(V(OUT))  = 12.1764990887   FROM 0      TO 0.0004
Vout_droop1 : MIN(V(OUT))  = 12.1037712097   FROM 0.0005 TO 0.0014
Vout_recov1 : TIME         = 0.000538190096  at 0.000538190096484
Vout_idle   : AVG(V(OUT))  = 12.1910003907   FROM 0.0021 TO 0.0034
Vout_droop2 : MIN(V(OUT))  = 12.091091156    FROM 0.0035 TO 0.0044
Vout_recov2 : TIME         = 0.003508411887  at 0.003508411887
Vout_ripple : PP(V(OUT))   = 0.111996650696  FROM 0.0036 TO 0.0044
IL_peak     : MAX(I(L1))   = 3.50302958488   FROM 0      TO 0.0004
Pin         : AVG(V(IN)*(-I(V1))) = 25.7409651599  FROM 0.0036 TO 0.0044
Pout        : AVG(V(OUT)*I(I1))   = 24.3615174898  FROM 0.0036 TO 0.0044
DC_dev      : RMS(V(out)-12.1985) = 0.0565057256   FROM 0      TO 0.005
```

4. Simulation Results — Nominal vs Worst-Case Comparison

4.1 Full Results Table

Metric	VIN=9.6V (Rev4)	VIN=8.0V (WC)	Target	Status	Δ
Output voltage (pre-pulse)	12.204 V	**12.176 V**	12.0 V reg.	**PASS**	↓
Output voltage (idle)	12.191 V	**12.191 V**	12.0 V reg.	**PASS**	=
Ripple PP (2A load)	197.6 mV (1.63%)	**112.0 mV (0.93%)**	< 240 mV	**PASS**	↓↓
Droop — 1.5A pulse	73 mV (0.60%)	**73 mV (0.60%)**	< 600 mV	**PASS**	=
Droop — 2.0A pulse	102 mV (0.84%)	**100 mV (0.82%)**	< 600 mV	**PASS**	≈
Recovery — 1.5A pulse	31.7 µs	**38.2 µs**	< 1 ms	**PASS**	↑
Recovery — 2.0A pulse	40.6 µs	**8.4 µs**	< 1 ms	**PASS**	↓
IL_peak (pre-pulse window)	3.554 A	**3.503 A**	< 3.59 A	**PASS**	↓
Efficiency (2A load)	96.0%	**94.6%**	> 85%	**PASS**	↓
DC_dev (RMS from 12.1985V)	66.1 mV	**56.5 mV**	Informational	**INFO**	↓

Δ column key: ↓ = improved / lower at WC, ↑ = degraded / higher at WC, ≈ = negligibly different, = = identical.

4.2 Metric-by-Metric Analysis

Output Voltage — PASS

Pre-pulse Vout = 12.176 V (−0.028 V vs nominal). The slight reduction is consistent with higher inductor current at VIN=8V causing marginally greater voltage drop in parasitic resistances (DCR, MOSFET Rds_on, diode forward voltage). The idle Vout = 12.191 V is identical to nominal, confirming the voltage loop regulates correctly once settled.

Output Ripple — PASS (unexpectedly lower at worst case)

Vout_ripple = 112.0 mV (0.93%) at VIN=8V vs 197.6 mV (1.63%) at VIN=9.6V — significantly lower at the harder operating point. This is counterintuitive since D=0.333 (higher duty cycle) should produce more charge removed per cycle from the output capacitor. The simulation result likely reflects a combined effect of the higher inductor current average reducing the relative contribution of the switching transient to ripple, and the polycap SPICE model's ESR interaction with the higher current waveform. Both results pass the 240 mV specification comfortably. The nominal VIN=9.6V remains the worst-case ripple operating point in simulation, which should be stated explicitly in the report.

Load Transient Droop — PASS (near-identical at both VIN)

Droop at 1.5A pulse: 73 mV at both VIN. Droop at 2A pulse: 102 mV (nominal) vs 100 mV (WC) — a negligible 2 mV difference. This consistency demonstrates that the current-mode inner loop responds equally fast regardless of input voltage — the correction occurs within one switching cycle (2.86 µs at 350 kHz) before the capacitor can meaningfully charge or discharge. The droop is dominated by the loop's response speed, not by VIN.

Recovery Time — PASS (divergent behaviour between pulses)

Recovery after the 1.5A pulse is 38.2 µs at VIN=8V vs 31.7 µs at nominal — a 21% increase, consistent with reduced voltage headroom at low VIN. Recovery after the 2A pulse is 8.4 µs at VIN=8V vs 40.6 µs at nominal — a significant improvement. This apparent anomaly arises from the measurement window: Vout_recov2 measures the first crossing of 12.15 V after the 2A step, which at VIN=8V may occur earlier due to the different transient dynamics at higher duty cycle. Both values are well within the 1 ms specification.

IL_peak — PASS (with important caveat)

IL_peak = 3.503 A, measured in the pre-pulse window (t=5.0–5.4ms absolute, 0.1A load). At 0.1A the converter operates near DCM boundary, and this measurement reflects light-load or startup-tail behaviour rather than worst-case heavy-load inductor current. The analytically correct worst-case IL_peak at VIN=8V, 2A load is: IL_avg + ΔIL/2 = 3.0 + 0.381 = 3.381 A — within the 3.59 A limit (42 mA margin) and well below the XAL6060-103MEC saturation current of 11.2 A (3.31× margin). This analytical figure should be cited in the report alongside the simulation measurement.

Efficiency — PASS (expected 1.4pp reduction)

η = Pout/Pin = 24.362/25.741 = 94.64% at VIN=8V vs 96.0% at nominal. The 1.36 percentage point reduction is attributable to higher conduction losses at D=0.333: MOSFET Q1 conducts for a larger fraction of each cycle (Ploss_cond = IL^2_avg × Rds_on × D), and the diode MBR735 conducts for D'=0.667 of each cycle with higher average current. Both losses scale with duty cycle. The 94.64% figure still provides 9.64 percentage points of margin above the 85% efficiency target.

5. Pass/Fail Summary — VIN=8.0V Worst Case

Metric	Measured	Target	Margin	Status
Output voltage	12.176–12.191 V	12.0 V regulated	*+1.5%*	**PASS**
Output ripple (2A load)	112.0 mV (0.93%)	< 240 mV (2%)	*53% headroom*	**PASS**
Droop — 1.5A pulse	73 mV (0.60%)	< 600 mV (5%)	*8.2×*	**PASS**
Droop — 2.0A pulse	100 mV (0.82%)	< 600 mV (5%)	*6.0×*	**PASS**
Recovery — 1.5A	38.2 µs	< 1 ms	*26×*	**PASS**
Recovery — 2.0A	8.4 µs	< 1 ms	*119×*	**PASS**
IL_peak (analytical WC)	3.381 A (theory)	< 3.59 A	*42 mA*	**PASS**
Efficiency	94.64%	> 85%	*+9.64 pp*	**PASS**

OVERALL: ALL 8 METRICS PASS AT WORST-CASE VIN=8.0V — Design confirmed stable across full 3S LiPo discharge range.

6. Required FYP Report Updates

Report Section	Update Required
§6.6 Results Summary	Add VIN=8.0V column to results table. State that worst-case ripple occurs at VIN=9.6V (197.6mV), not VIN=8V (112mV) — this is counterintuitive and requires one explanatory sentence.

Report Section	Update Required
§6.3 Load Transient	Add VIN=8V droop and recovery figures. Note consistency of droop (≈100mV at both VIN) demonstrating loop bandwidth independence from input voltage.
§6.4 Inductor Current	Report IL_peak(analytical) = 3.381A at VIN=8V alongside simulation. Note that simulation window measures light-load IL; analytical figure is the relevant worst-case.
§6.5 Efficiency	Add VIN=8V efficiency of 94.64%. Explain 1.36pp reduction via increased duty cycle conduction losses in Q1 and D1.
§7.4 Future Work	Startup overshoot (20.8%) remains the only outstanding simulation item. Remove worst-case VIN from future work — it is now complete.

EE499 FYP — VIN=8.0V Worst-Case Simulation Report | Fortune Olose | Maynooth University | 1 April 2026 | Supervisor: Dr. Bob Lawlor